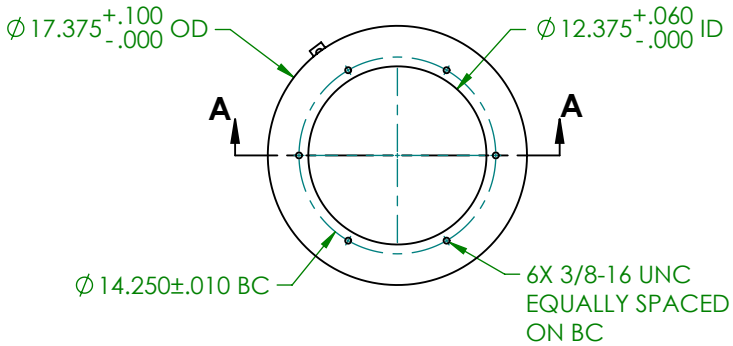

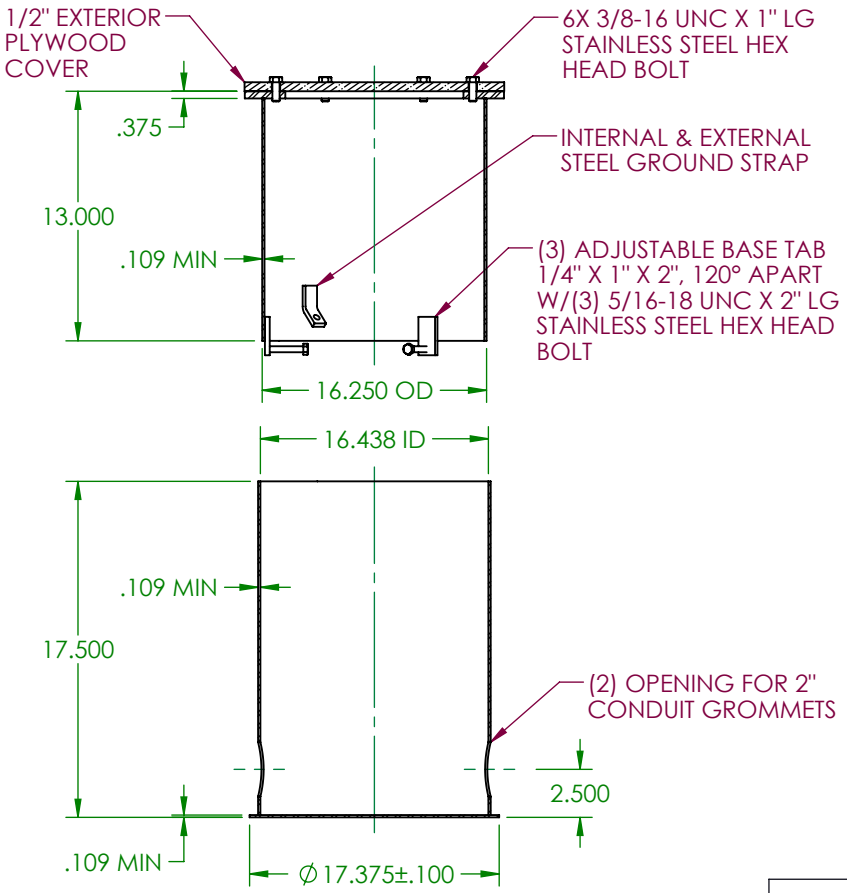

SECTION A-A
WITH PLYWOOD COVER
AND MACHINE SCREWS

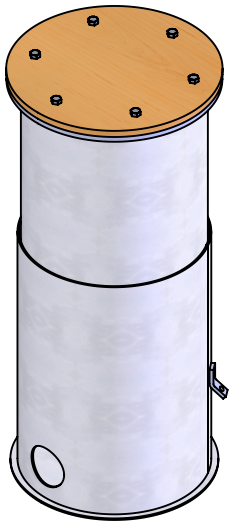

NOTE:

1. OPENINGS ARE ORIENTED 180° APART WITHIN ONE DEGREE. OTHER HOLE SIZES AND/OR LOCATIONS MUST BE SPECIFIED WHEN ORDERING.
2. PLYWOOD COVER IS 1/2" NOMINAL THICKNESS, GRADE CC, WITH Ø7/16" BOLT HOLES. PLYWOOD THICKNESS RUNS UNDERSIZED; ACTUAL THICKNESS IS 15/32" +0/-1/32".
3. OPTIONAL COPPER GROUND LUG, DRAIN COUPLING AND/OR OPENING MUST BE SPECIFIED WHEN ORDERING.
4. (2) Ø2" GROMMETS (STD) ARE SHIPPED UNASSEMBLED WITH BASE.
5. FINISH-HOT DIP GALVANIZED PER ASTM A123.
6. LIGHT BASE HEIGHT IS ADJUSTABLE FROM 17 7/8" TO 29 1/2".
7. L867 ADJUSTABLE LIGHT BASE MUST BE EMBEDDED IN PORTLAND CEMENT CONCRETE TO MEET LOAD REQUIREMENTS OF FAA.

DWN: DOUG F.	L-867B Ø16" ADJUSTABLE LIGHT BASE, 29 1/2" MAX HEIGHT, W/GROMMETS
DATE: 7/17/2017	
SCALE: NTS	MILLERBERND 622 6TH ST. SO. WINSTED, MN 55395 — 167ACG295PCC
SHEET 1 OF 1	