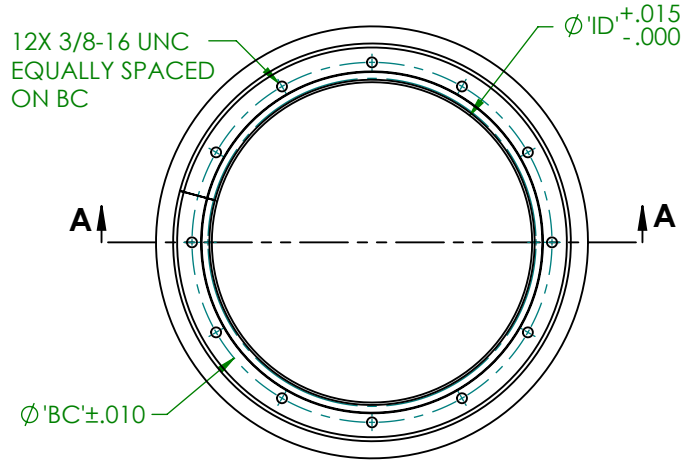

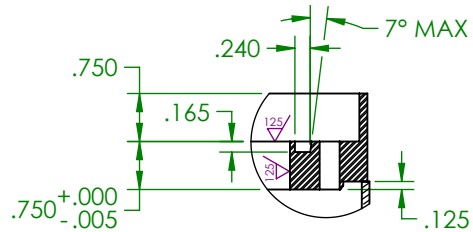

DETAIL B
SCALE 1:3

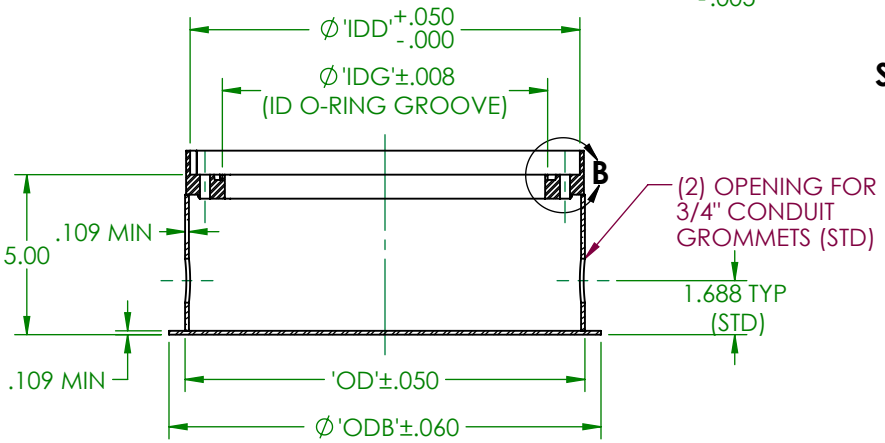

SECTION A-A

NOTE:

1. SPECIFY HEIGHT WHEN ORDERING; TOLERANCE IS ±1/4". PART NUMBERS, WHERE (HT) IS THE HEIGHT:
   - L-868 8" DIA: PN 88ICG(HT)FY
   - L-868 12" DIA: PN 128ICG(HT)FY
   - L-868 15" DIA: PN 158ICG(HT)FY

   EXAMPLE: 128ICG05FY (Ø12", 5"HIGH)
2. TAPPED HOLE PATTERN IN TOP FLANGE IS ALIGNED WITH CENTERLINE OF GROMMET OPENINGS WITHIN 1°.
3. OPENINGS ARE ORIENTED 180° APART WITHIN ONE DEGREE. OTHER HOLE SIZES AND/OR LOCATIONS MUST BE SPECIFIED WHEN ORDERING.
4. (2) Ø3/4" GROMMETS (STD) SHIPPED UNASSEMBLED WITH BASE.
5. PLYWOOD COVER IS 3/4" THICK, EXTERIOR GRADE CC, WITH Ø7/16" BOLT HOLES. PLYWOOD THICKNESS RUNS UNDERSIZED; 3/4" ACTUAL THICKNESS IS 23/32" +0/-1/32".
6. (6) 3/8-16 UNC X 1" LONG STAINLESS STEEL HEX HEAD BOLTS ARE INCLUDED.
7. OPTIONAL COPPER GROUND LUG, DRAIN COUPLING AND/OR OPENING, ANTI-ROTATION FINS AND/OR ANTI-UPLIFT BARS MUST BE SPECIFIED WHEN ORDERING.
8. FINISH-HOT DIP GALVANIZED PER ASTM A123.

NOMINAL Ø	'OD'	'ODB'	'BC'	'ID'	'IDD'	'IDG'
8"	8.500	9.500	7.250	6.500	8.160	N/A
12"	12.500	13.500	11.250	10.000	12.160	10.145
15"	15.500	16.500	14.250	13.000	15.160	13.145

Ø8" BASE HAS NO O-RING GROOVE

GROUND LUG	EXT		INT		—	—	—	—
PLYWOOD THICKNESS	STD		OTHER					
ANTI-ROTATION FINS	#		HT/LOCATION					
ANTI-UPLIFT BARS	#							
DRAIN HOLE & TYPE	SIZE					OTHER		
OPENING LOCATION		0°	90°	180°	270°			
OPENING SIZE	STD 3/4"							
	OTHER							
OPENING HT. STD 3/4" FROM BTM	STD							
	OTHER							

TOLERANCES UNLESS SHOWN
FRACTIONAL ±1/32"
DECIMAL ±.030
ANGLES ±0°30'

DWN: DOUG F.
DATE: 8/30/2017
SCALE: NTS
SHEET 1 OF 1

L-868 INSET LIGHT BASE W/PAVEMENT DAM
Ø8", Ø12" AND Ø15"

MILLERBERND
622 6TH ST. SO.
WINSTED, MN
55395

8ICGY